MAGNETIC REED SWITCH PROBE EXTENSOMETER SYSTEM

Model R-4

APPLICATION

The R-4 magnetic probe extensometer is used to measure settlement of soils at various depths and produce a settlement profile at a given point to determine:

- Consolidation of foundation soils
- Settlement within embankments and dams
- Deformation around excavations

DESCRIPTION

The R-4 magnetic probe extensometer consists of an array of magnetic targets, surrounding a common access pipe, positioned at different depths along the length of a borehole or the height of an embankment or fill.

A reed switch probe, lowered down the access pipe, detects the position of the magnet anchors outside the tube. The probe is suspended by a single graduated tape that incorporates the electrical leads. The tape graduation is used to determine the deformation between magnetic anchor points along the pipe's axis.

The magnetic anchors are available in two configurations: leaf spring anchor, for borehole installation, and plate anchor, for embankment or fill installation. The leaf spring anchor can be pushed in place or lowered with the access pipe and released with an external draw wire.

The plate anchor consists of a plate with a central hole. The plate anchors are installed with the access pipe as the construction of the embankment or fill proceeds.

Telescoping access pipes are used where deformations exceeding 1% are expected. The R-4 system is compatible with standard inclinometer casings.

Roctest Telemac highly recommands using a probe centralizer for repeatable readings. The R-4 system can be used with inclinometer casings.

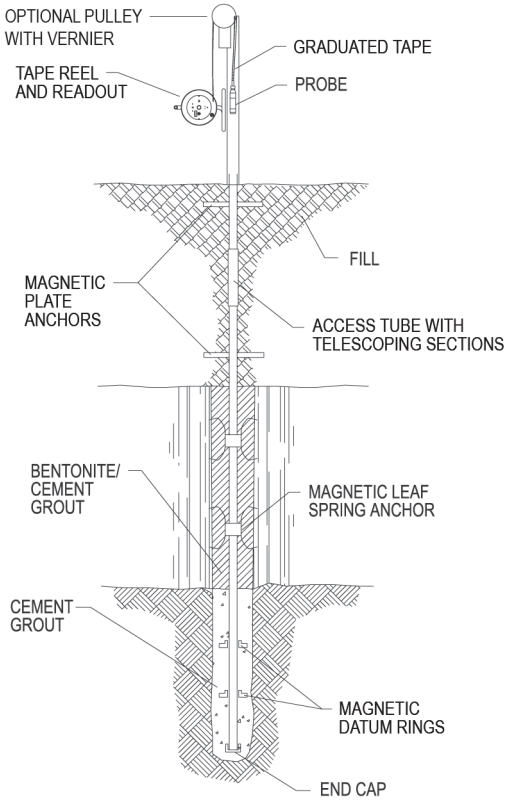

R-4 System

ROCTEST TELEMAC

SPECIFICATIONS

R-4 READOUT UNIT (probe, reed switch, cable and reel)						
Model No.	**FR-R4-30M**	**FR-R4-50M**	**FR-R4-100M**	**FR-R4-150M**	**FR-R4-100F**	**FR-R4-300F**
Probe diameter	16 mm	16 mm	16 mm	16 mm	16 mm	16 mm
Probe length	230 mm	230 mm	230 mm	230 mm	230 mm	230 mm
Tape length	30 m	50 m	100 m	150 m	100 ft	300 ft
Graduation	1 mm	1 mm	1 mm	1 mm	0.1 ft	0.1 ft

OPTIONAL PULLEY	
Model No.	FR-1123A50100 (Used with 48-, 70-, and 85-mm diameter casing)

PVC COLLAR TAPE GUIDE				
Model No.	10-1131001072	20-11312067	20-1131002065	20-1131002064
Required pipe diameter	33 mm	48 mm	70 mm	85 mm

ANCHORS

PUSH-IN LEAF SPRING ANCHOR			
Model No.	**Min. bore diameter**	**O.D. Anchor ext.**	**Pipe diameter**
FR-1131A50400	76 mm	140 mm	33 mm
FR-1131A50400C	101 mm	152 mm	48 mm
FR-1131A50400A	127 mm	254 mm	70 mm
FR-1131A50400B	152 mm	254 mm	85 mm

LEAF SPRING ANCHOR			
Model No.	**Min. bore diameter**	**O.D. Anchor ext.**	**Pipe diameter**
FR-1131A50100	76 mm	222 mm	33 mm
FR-1131A50100C	101 mm	254 mm	48 mm
FR-1131A50100A	127 mm	279 mm	70 mm
FR-1131A50100B	152 mm	305 mm	85 mm

MAGNETIC PLATE ANCHOR	
Model No.	**Pipe diameter**
FR-1131A50200	33 mm
FR-1131A50200C	48 mm
FR-1131A50200A	70 mm
FR-1131A50200B	85 mm

MAGNETIC DATUM RING ANCHOR	
Model No.	**Pipe diameter**
FR-1131A50300	33 mm
FR-1131A50300C	48 mm
FR-1131A50300A	70 mm
FR-1131A50300B	85 mm

OPTIONS

- Readout instrument stand
- Probe centralizer
- Plate dimensions available: STD: 203 × 203 mm; OPT: 305 × 305 mm or 610 × 610 mm

PIPE

ACCESS PIPE		
Model No.	**Length**	**O.D.**
99-PLAST100CSG8005	1.5 or 3 m	33 mm
99-PLAST150CSG8005	1.5 or 3 m	48 mm

TELESCOPING ACCESS PIPE			
Model No.	**O.D.**	**I.D.**	**Length**
20-1131002004	33 mm	24 mm	1.5, 2.0 or 3.0 m
20-1131002059	48 mm	38 mm	1.5, 2.0 or 3.0 m

TELESCOPING COUPLING		
Model No.	**O.D.**	**Total Range**
20-1131002043	42 mm	152 mm
20-1131002060	57 mm	152 mm

INSTALLATION JIG FOR TELESCOPING ACCESS PIPE	
Model No.	**O.D.**
40-1131042900	33 mm
40-1131043000	48 mm

END CAP	
Model	**Pipe diameter**
05-35019	33 mm
05-35021	48 mm

ORDERING INFORMATION

Please specify:

- Borehole diameter and depth
- Access pipe model number and length (For more information about 70 and 85 mm O.D. access pipe, please refer to standard inclinometer casing data sheets)
- Telescoping or standard couplings
- Anchor model number
- Readout instrument

Products and specifications are subject to change without notice.
© Roctest Limited, 2005.

Tel.: 1.450.465.1113 • 1.877.ROCTEST (Canada, USA) • 33.1.64.06.40.80 (Europe) • www.roctest.com • www.telemac.fr