12.1010 MUST DEFORMATION SENSOR

Fiber Bragg Grating (FBG)

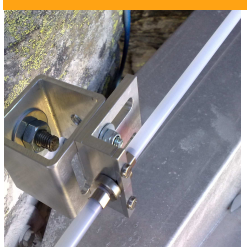

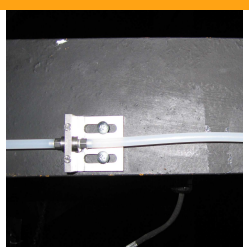

GENERAL DESCRIPTION

The FBG deformation sensors are transducers that transform a static or dynamic distance variation into a change in reflected wavelength of a pre-stressed Fiber Bragg Grating that can be measured with SMARTEC's FBG reading units.

TECHNICAL DESCRIPTION

The sensor is composed of an active and a passive part. The active part contains the measurement fiber and measures the deformations between its two ends, transforming it into a wavelength shift of the Fiber Bragg Grating. The passive part is insensitive to deformations and is used to connect the sensor to the Reading Unit. In the passive part of the sensor, it is possible to install a loose Fiber Bragg Grating for temperature sensing and compensation.

The sensors are available in single-ended, double-ended and chained configuration. It is possible to connect up to 6 full-range temperature compensated sensors. The sensors are terminated with E2000-APC connectors or on user's specifications.

The sensors can be quickly and easily installed without affecting the construction schedule. They can be directly embedded in concrete and mortars, or surface mounted.

FEATURES

- High resolution
- Static and dynamic measurements
- Long Gauge-length
- Embeddable in concrete or surface mountable
- Temperature compensation
- Available in single-ended, double-ended and chained configurations
- Insensitive to corrosion
- Immune to electromagnetic fields
- Easy to install
- Long lifetime
- Waterproof

SENSOR CONFIGURATIONS

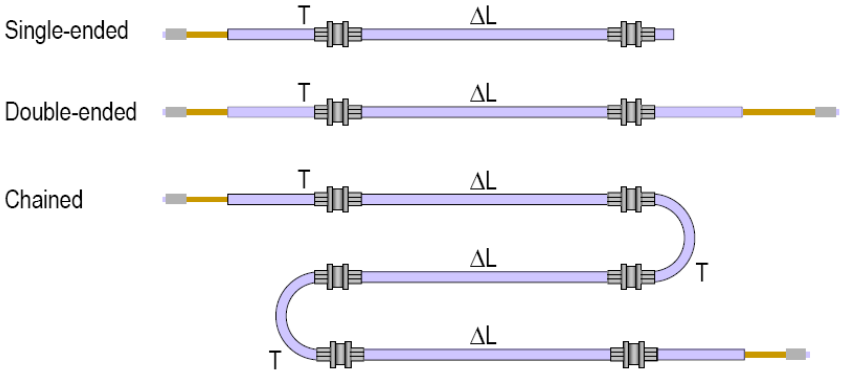

TECHNICAL CHARACTERISTICS

Length of active zone (measurement basis)	0.20 to 2m
Length of passive zone (connecting cable)	1 to 200 m (longer distances available on request)
Pre-tensioning of the measurement fiber	0.5% of the length of active zone (others on special request)
Connecting cable protection options (see specific datasheet for details)	Standard (recommended for embedding or surface mounting in normal conditions) Stainless steel protecting tube (recommended in harsh conditions) Simple cable without protecting tube (recommended for laboratory conditions).
Measurement range	Strain: 0.5 % in shortening, 0.75 % in elongation 2500 με to +3000 με (for chain configuration) Temperature: -40 ℃ to +80 ℃
Strain resolution / accuracy	0.2 με / 2 με (using SMARTEC's FBG reading unit)
Temperature measurement range	-40 ℃ to +80 ℃
Operating temperature	Passive zone: -40 ℃ to +80 ℃ Standard active zone: -50 ℃ to +110 ℃ Special active zone (upon request): -50 ℃ to +170 ℃
Waterproof	5 bars (15 bars with extra protection on anchoring points)
Standard Wavelengths	**Type** / **WLT** / **WLs** ATS / 1522 nm / 1542 nm BTS / 1525 nm / 1552 nm CTS / 1528 nm / 1562 nm DTS / 1516 nm / 1532 nm ETS / 1519 nm / 1572 nm Max. 5 sensors on same chain.

ORDERING INFORMATION

12.1010 MuST FBG Deformation Sensor single-ended without temperature sensor
12.1011 MuST FBG Deformation Sensor single-ended with temperature sensor
12.1012 MuST FBG Deformation Sensor double-ended without temperature sensor
12.1013 MuST FBG Deformation Sensor double-ended with temperature sensor

Smartec SA · Via Pobiette 11, CH-6928 Manno, SWITZERLAND · **Phone** +41 91 610 1800 · **Fax** +41 91 610 1801 · smartec@smartec.ch · **www.smartec.ch**

All information contained herein is believed to be accurate and is subject to change without notice. © Roctest Ltd.